RG-TET252-1/D

Ranger Lane Flap Barrier Turnstile Single/Double

RANGER

FEATURES

Reliability
- SUS304 stainless steel casework ensure long-lasting durability.
- High quality electrical components.

Safety Features
- Barriers retract automatically during emergencies.
- Barriers retract automatically during power outage with battery installed.
- All smooth finish. No exposed screws.
- Ergonomic design makes card and fingerprint authentication fast & simple for users.

Simplification
- LCD on the flap barrier control board, easy operation.

*All image and specification is subject to change without prior notice.

Technical Data	RG-TET252-1	RG-TET252-D
Power Requirements	AC100 ~ 120V/200 ~ 240V, 50/60Hz	
Working Temperature	-28°C ~ 60°C	
Working Humidity	5% ~ 80%	
Working Environment	Indoor/Outdoor	
Max. Speed of Throughput	30 people per minute	
Lane Width (mm)	600	600 x 2
Dimension (L*W*H)	1200 * 300 * 980 (mm)	(1200 * 300 * 980 (mm)) x 2
LED Indicator	Support	
Cabinet Material	SUS304 Stainless Steel	
Lid Material	SPCC (with black baking paint)	
Barrier Material	Acrylic	
Barrier Movement	Retracting	
Emergency Mode	Support	
Security Level	Medium	
MCBF	5 million	
Opening Time	0.8s	
Noise of Opening	≤30dB	

Ordering Info

Model	Door Configuration
RG-TET252-1	Lane Flap Barrier Turnstile (Single)
RG-TET252-D	Lane Flap Barrier Turnstile (Double)
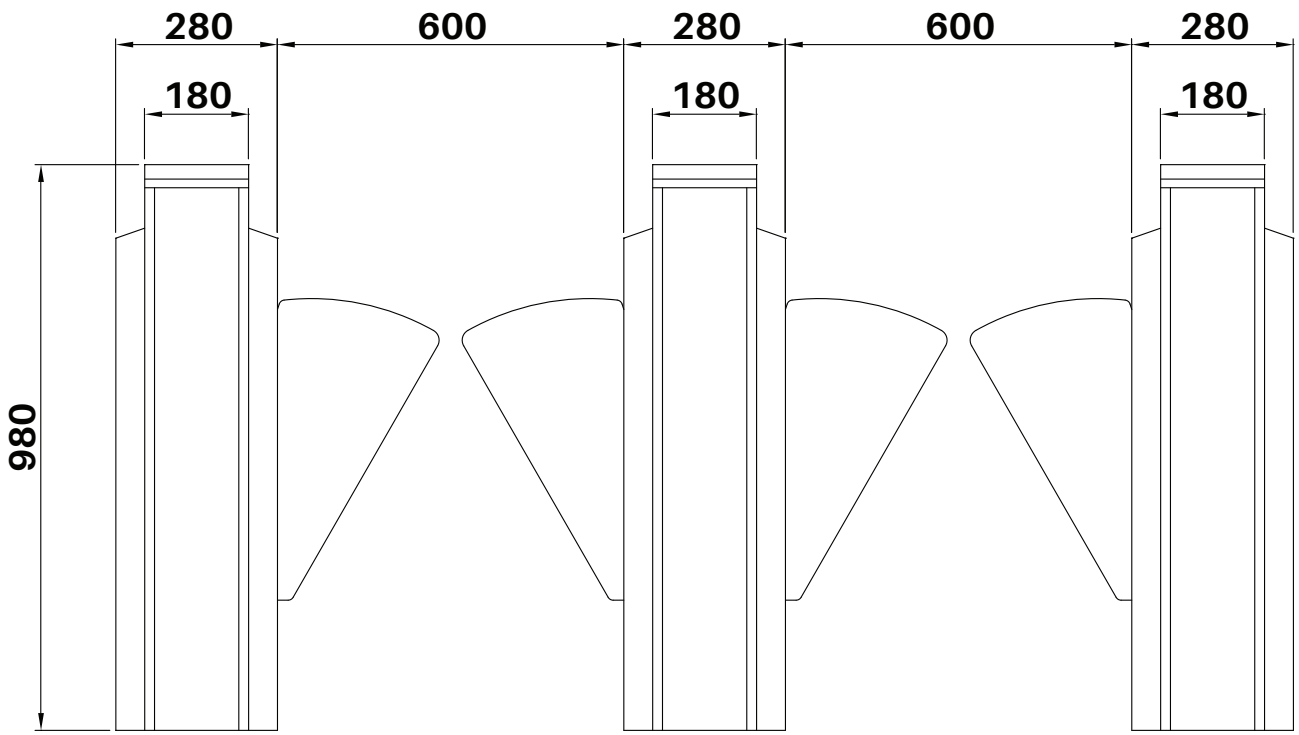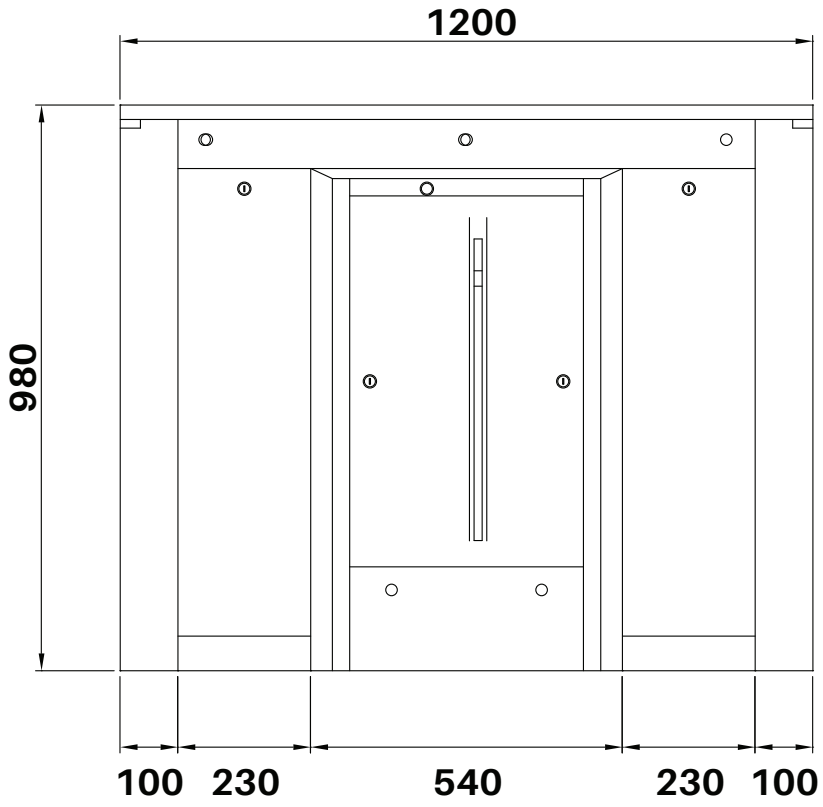
*All specification is subject to change without prior notice.