RG-AT27S-H-O/I

Ranger Heavy Automatic Swing Door Operator

RANGER

HEAVY DUTY
Big loading force with reliable transmission of driving force

Flexible Adjustment
Easily adjust door opening angle, speed, time and collision time.

KG
170

Maximum Gate Weight
Maximum support gate weight up to 170kg.

←METER→
1.2

Maximum Door Width
Maximum support door width up to 1.2 Meter.

*All image and specification is subject to change without prior notice.

Technical Data	RG-AT27S-H-I	RG-AT27S-H-O
Drive unit	24V DC motor	
Anti-extrusion device	standard	
Power supply voltage	AC220V±10%, 50/60Hz	
Rated power consumption	100W (MAX)	
Opening time (speed)	3-7S adjustable	
Closing time (speed)	3-7S adjustable	
Open time	0.5-30S adjustable	
Opening angle	80°-100°	
Drive arm	PULL arm	PUSH arm
Ambient temperature	-20 ~ +45°C	
Relative humidity	≤85%	

Ordering Info

Model	
RG-AT27S-H-I	Pull Arm
RG-AT27S-H-O	Push Arm

Optional Accessories

*All image and specification is subject to change without prior notice.

Wireless Push Button

Safety Beam Sensor

Dimension Drawings (mm)
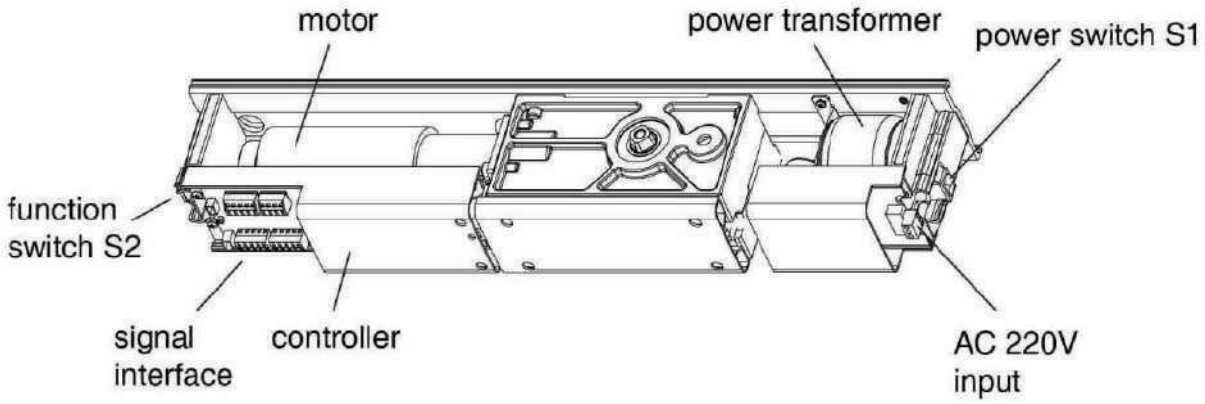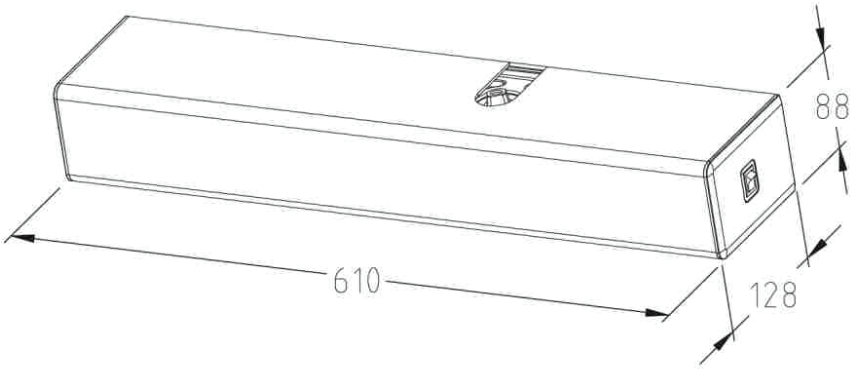
*All specification is subject to change without prior notice.