RG-TFB308-1/D

Ranger Swing Barrier Turnstile

RANGER

Reliability
SUS304 stainless steel casework ensure long-lasting durability with high quality electrical components.

Safety Features
Barriers unlock automatically during power outage and no exposed screws.

Built in Reader Integration
Integrated with either card or fingerprint access control reader.

Simplification
Simplified structure and connection with an LCD on the flap barrier control board for easy operation.

*All image and specification is subject to change without prior notice.

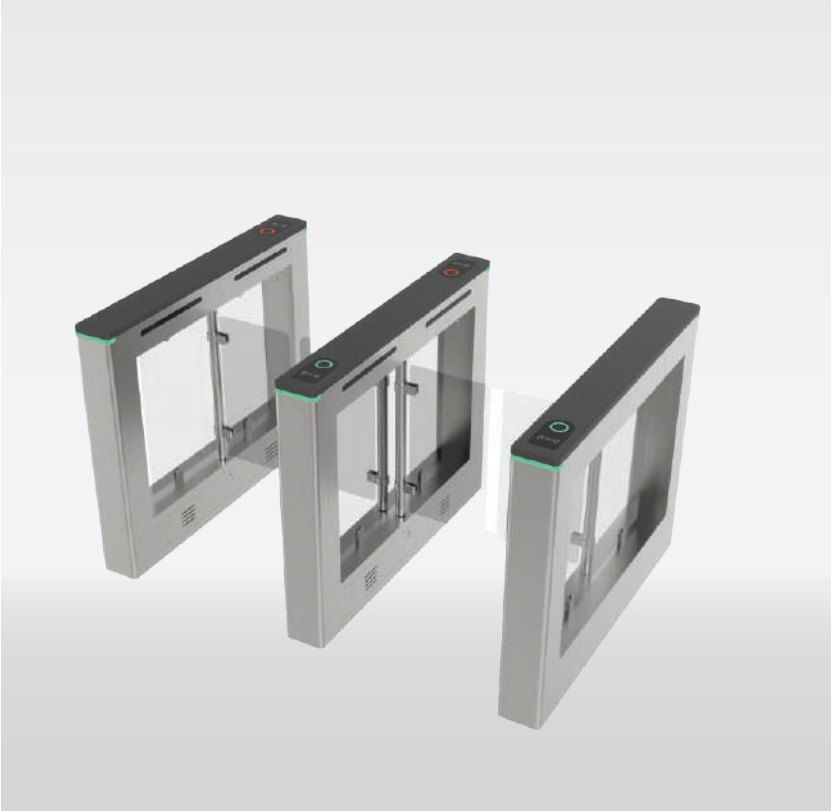

Technical Data	RG-TFB308-1/D
Power Requirements	AC100 ~ 120V/200 ~ 240V, 50/60Hz
Working Temperature	-10°C ~ 70°C
Working Humidity	5% ~ 90% (non-condensing)
Working Environment	Indoor
Infrared Sensor	6 pairs
Max. Speed of Throughput	30 people per minute
Lane Width (mm)	650
Dimension (L*W*H)	1200 * 150 * 980 (mm)
LED Indicator	Support
Cabinet Material	SUS304 Stainless Steel (1.0mm thickness)
Lid Material	SUS201 with black baking paint (1.2mm thickness)
Barrier Material	Acrylic
Emergency Mode	Support
Security Level	Medium
MCBF	2 million
Opening Time	0.8s
Noise of Opening	≤60dB
Power Rating	120W

Dimension Drawings (mm)

*All specification is subject to change without prior notice.

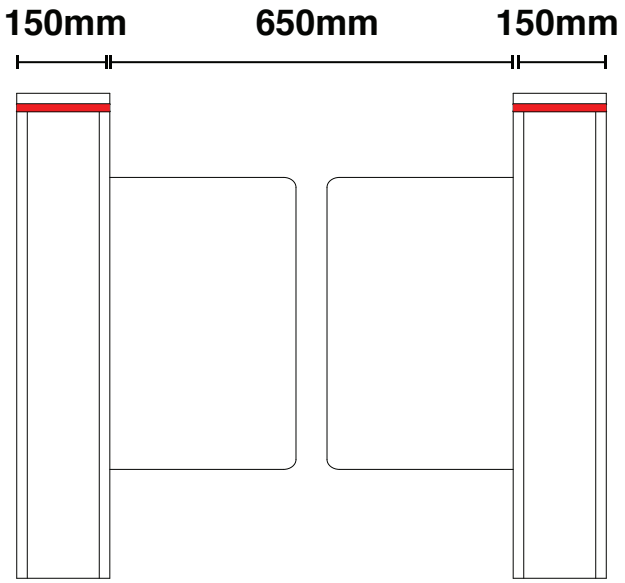

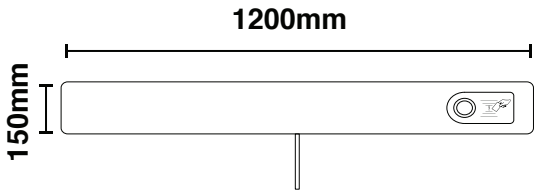

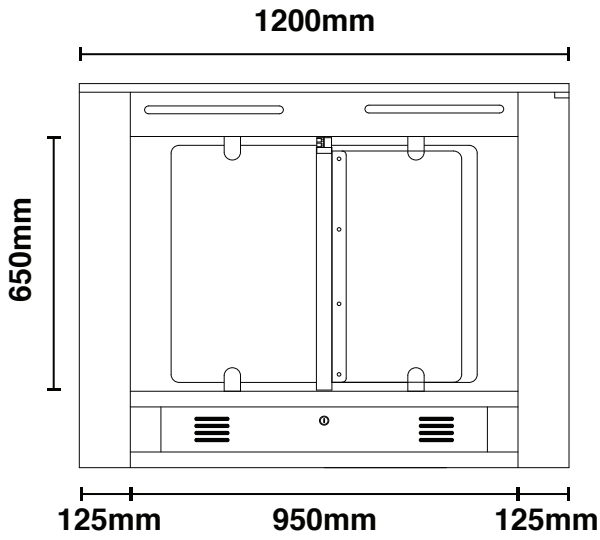

Ordering Info

Model	
RG-TFB308-1/D	Ranger Swing Barrier Turnstile