# RG-TSA128

## Tri-pod Turnstile

RANGER

- Pure Mechanical,Semi-Auto, Full-Auto Mode.
- Cable or Remote Override for emergency.
- Automatic Drop down arm when power off or emergency.
- Retail crow control

*All image and specification is subject to change without prior notice.

Space efficient turnstile security barriers, with compact design,yet offer sufficient space to integrate any access control system.Can be mounted with display, passage counter, card reader,token operation traffic lights,Command console and alarm system against unauthorized entries. Can be applied for stadiums and arenas, perimeter and interior security,recreation and amusement park, retail crowd control,transit fare collection and lobby access control.Guarantees many years of the turnstile trouble-free operation even in unfavourable environments.

| Technical Data | RG-TSA128 |
|---|---|
| Dimension | 480*280*960mm |
| Unlock Time | 0.2s |
| Passage Width | ≤550mm |
| Throughput Rate | 35p/m |
| Power Supply | 100~240V |
| Max Power Consump | 30W |
| Frequency | 50~60hz |
| Protection Level | IP45 |
| Working Temperature | -25~75°C |
| Electro-magnetic Drive | DC |
| Net Weight | 35KG |
| Input | 12V Dry contact |

## Ordering Info

| Model |
|---|
| RG-TSA128 |

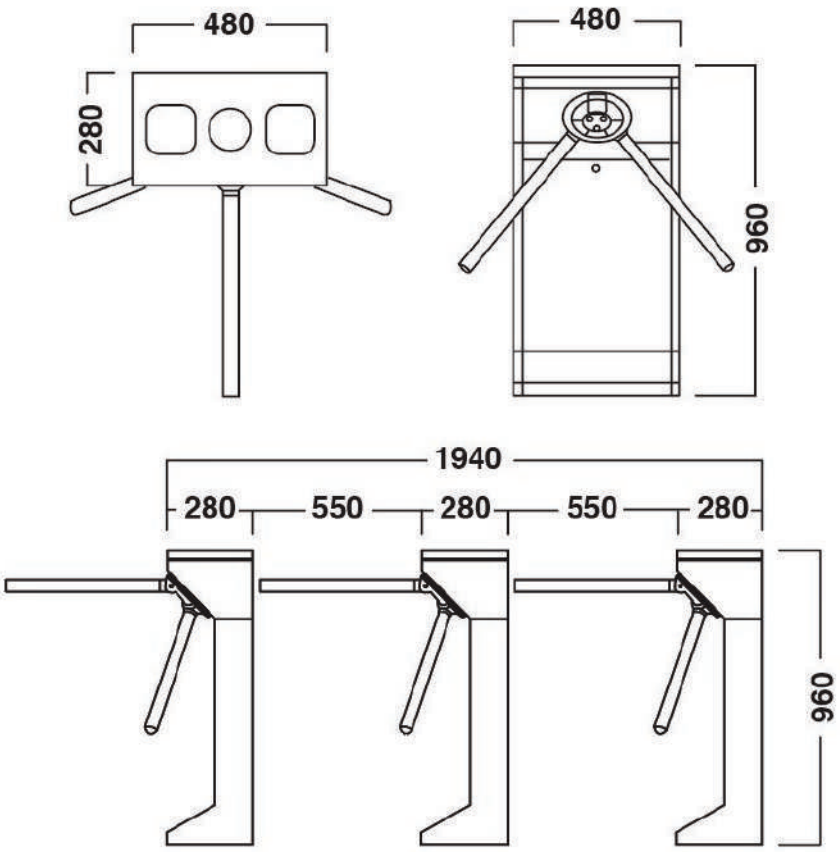
480
280
480
960
1940
280
550
280
550
280
960