RG-TFB325-OKU

Ranger Swing Barrier Turnstile

RANGER

- Can be integrated with any kind of access control system
- Two way passage directions
- 35 person per minute
- Adjustable open / close speed

*All image and specification is subject to change without prior notice.

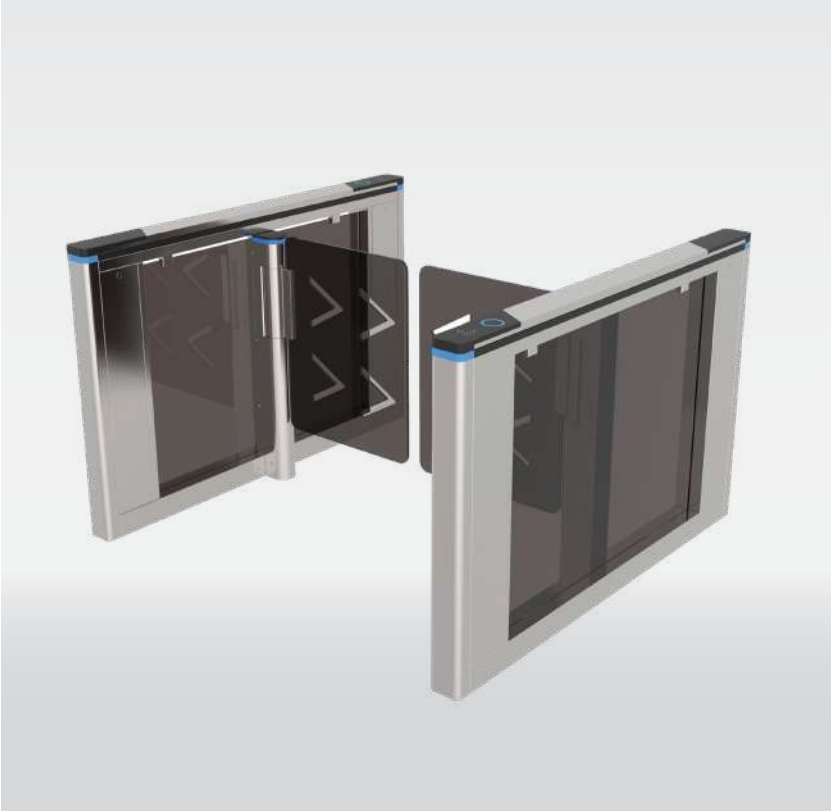

Technical Data	RG-TFB325-OKU
Passage Width	≤1200mm
Throughput Rate	35p/m
Power Supply	100-240 V/(ac)
Operational Voltage	24 V/(dc)
Max Power Consumption	35W
Frequency	13m/min
Maximum of Remote Control	50-60hz
Protection Level	IP44
Working Temperature	-25°C ~ +70°C
Dimension Excluding Bars	1500 x 150 x 980mm
Net Weight Including Bars	62Kg

Ordering Info

Model
RG-TFB325-OKU
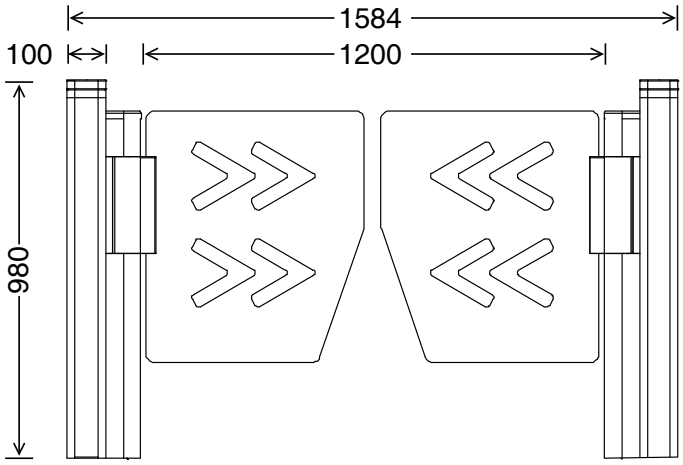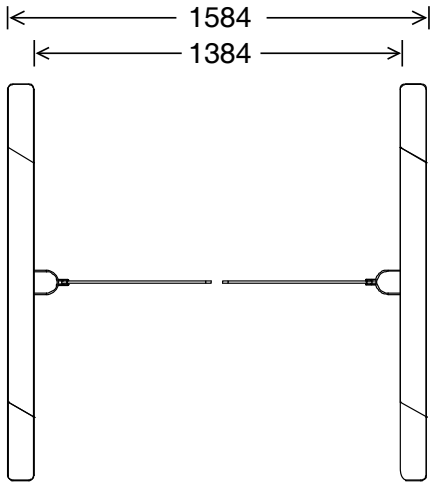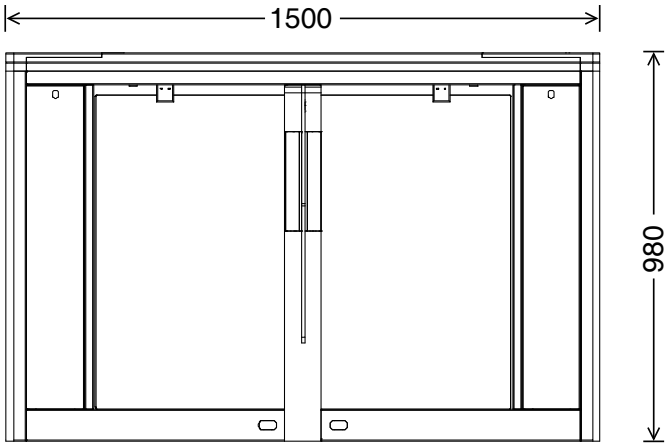
*All specification is subject to change without prior notice.