RG-TFB306

Ranger Swing Barrier Turnstile

RANGER

Ranger Swing Barrier Turnstile designed as space efficient security barriers comes with a compact design that integrate with any access control system. The unique swing arm features provides a safety solution and durability with minimal maintenance.

Ranger Swing Barrier Turnstile is a heavy-duty design for 24 hours continuous application. Best fit for indoor or outdoor with high durability industrial parts. The barrier swings are mainly made with plastic plate, toughened glass and stainless steel frame.

RG-TFB306

Ranger Swing Barrier Turnstile

RANGER

Various Type Of Cards & Barcode
Automatic identification system that functioning in ease integrate any access system.

Anti-Clipping
Double anti-clipping function, photocell and mechanical anti-clipping.

Voice & Strobe Light Alerts
Offers dependable voice and visual alarm for warning with emergency notifications.

Can Set Delay in 1-60s
The barrier can be set to delay closing in 1-60s after a valid card-reading.

*All image and specification is subject to change without prior notice.

Technical Data	RG-TFB306	RG-TFB306M
Passage Width	≤600mm	
Throughput Rate	35 Person/Minute	
Power Supply	AC240V	
Operation Voltage	24V	
Max Power Consumption	35W	
Frequency	50~60Hz	
Protection Level	IP44	
Environment Temp.	-25°C ~ +70°C	
Net Weight Includ Bars	95KG	
Dimension	1400 x 185 x 1020mm	

Standard Colours

White Aluminium
(Similiar to RAL9003)

Ordering Info

Model	Door Configuration
RG-TFB306	Ranger Swing Barrier Turnstile
RG-TFB306M	Ranger Swing Barrier Turnstile (Middle)
RG-TFB306	Swing Barrier Turnstile

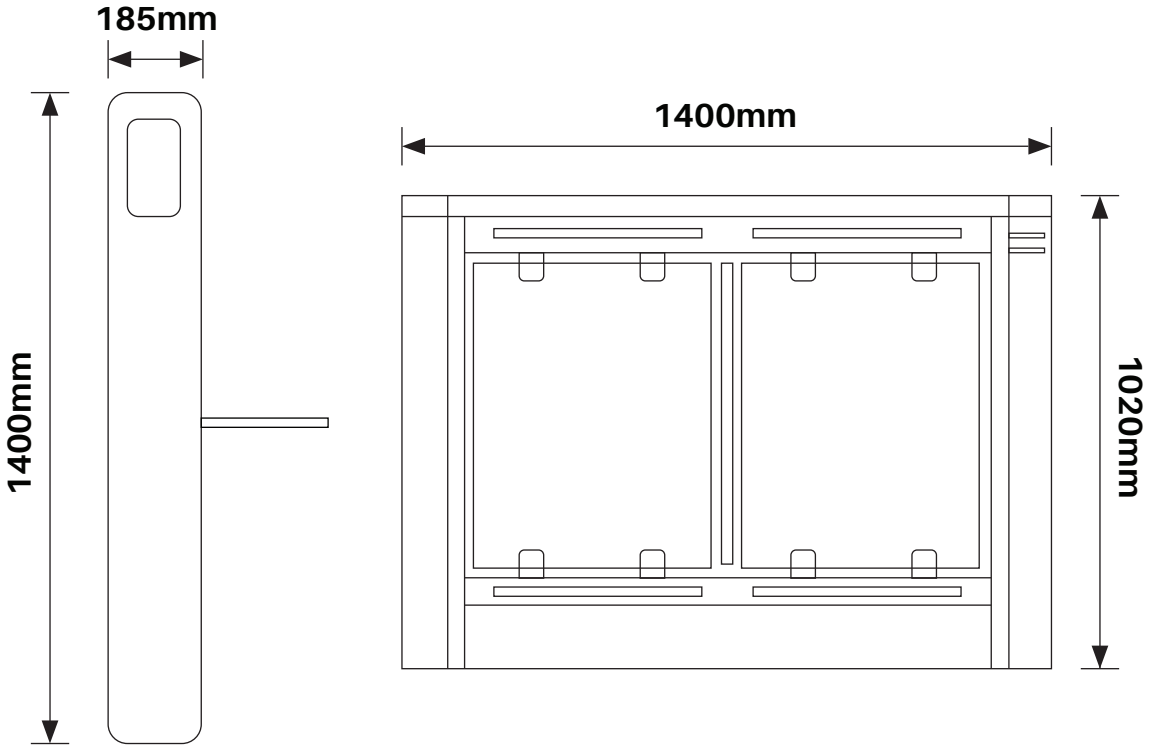
185mm
1400mm
1400mm
1020mm

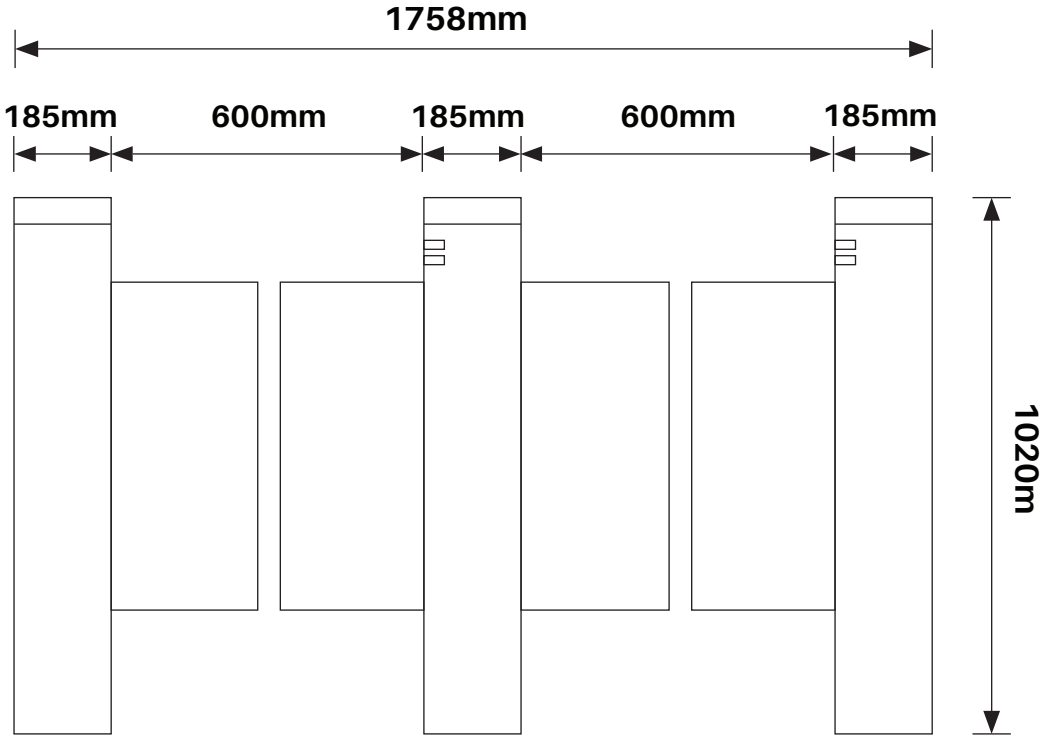
1758mm
185mm
600mm
185mm
600mm
185mm
1020m