GAC-201R-B

Vehicle Detector Radar

*BLUETOOTH function
- adjust via Wechat apps

GUIDE VIDEO

The GAC201R-B Vehicle Detector Radar is a non-contact detection device designed for targets such as vehicles and pedestrians. Operating in the millimeter-wave band, it transmits linear frequency-modulated continuous wave signals to detect targets. The radar performs high-speed, real-time processing of reflected echoes to achieve fast and accurate target detection.

Features

- Blind Zone without Detection Distance
- All-weather Work
- Detection Accuracy
- Work Reliability
- Installation Flexibility
- Low Cost to Install and Maintain
- Convenient Power Supply
- Use Environment Adaptability

Technical Specification

Unit Model	GAC-201R-B
Input Voltage	DC12V 150mA
Working Frequency	24GHz to 24.25GHz
Modulation Mode	FMCW
Sending Power	10-12dBm
Horizontal Beam	35°± 5°
Vertical Beam	15°± 3°
Detection Distance	1 – 6 meters, ±0.1 meters
Working Temperature	-40°C~+85°C
Protection Level	IP67

Dimension Diagram

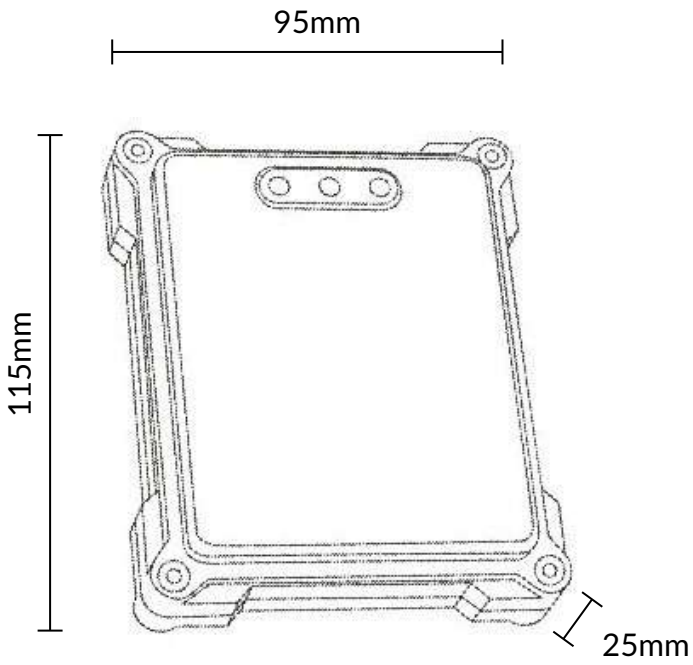

Installation Diagram
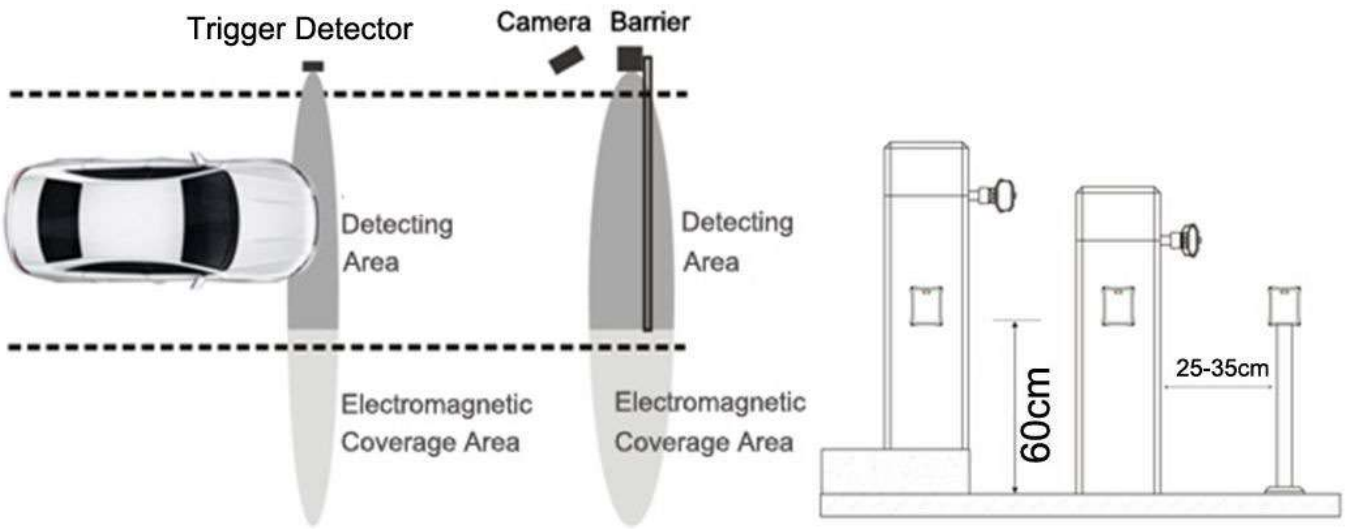
1) When applied to vehicle detection, the optimal height of the detector center from the road surface is 50cm for small vehicles and 60cm for big trucks.
2) The barrier casing must be fixed firmly to prevent the casing from shaking when the barrier is working.
3) Within the detection distance, there must be no obstacles except the barrier pole, such as road cones, isolation column, signs, etc..